A 白/White Boot Fighter Black Selena

http://bataf.blog.163.com

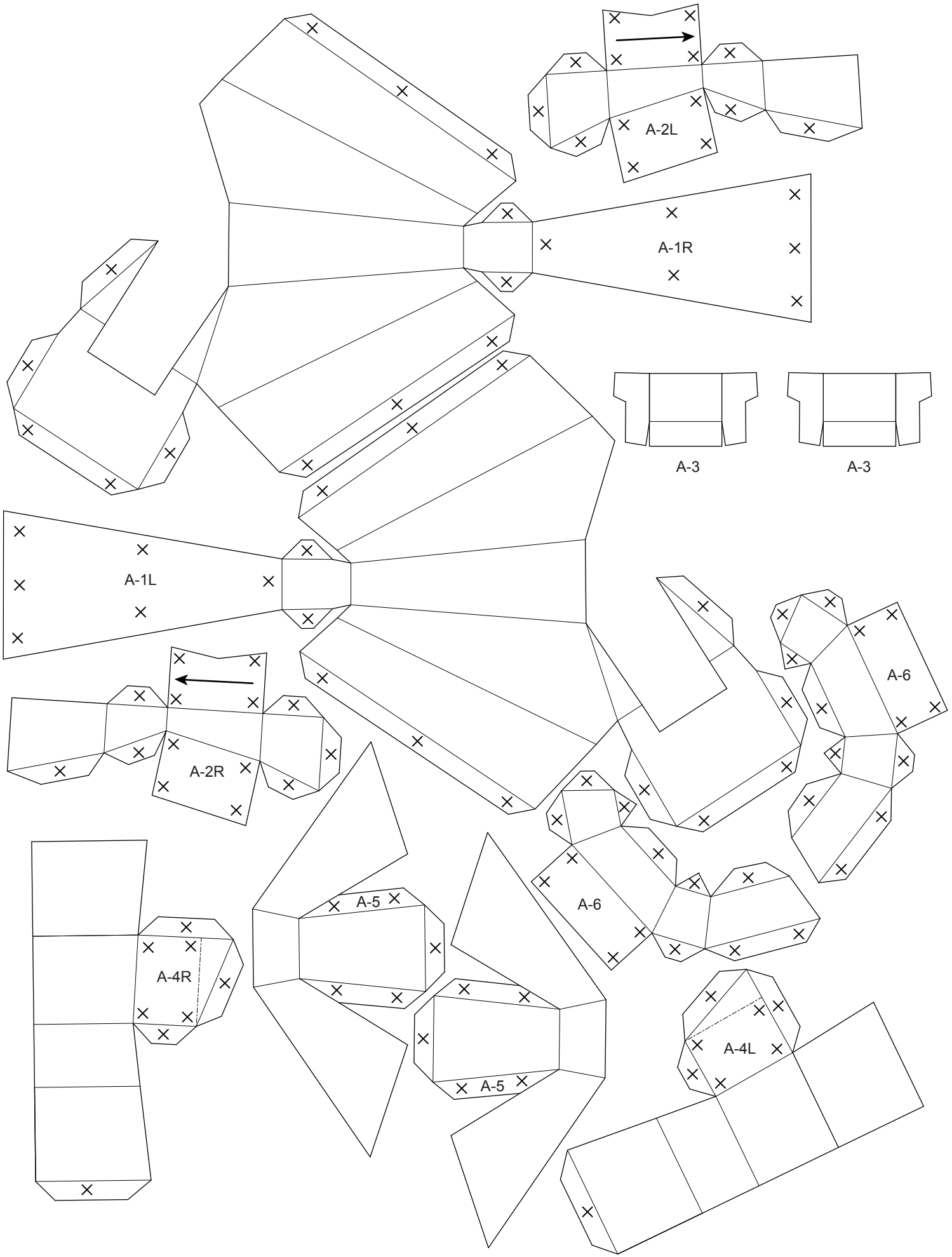

B 白/White

http://bataf.blog.163.com

Boot Fighter Black Selena

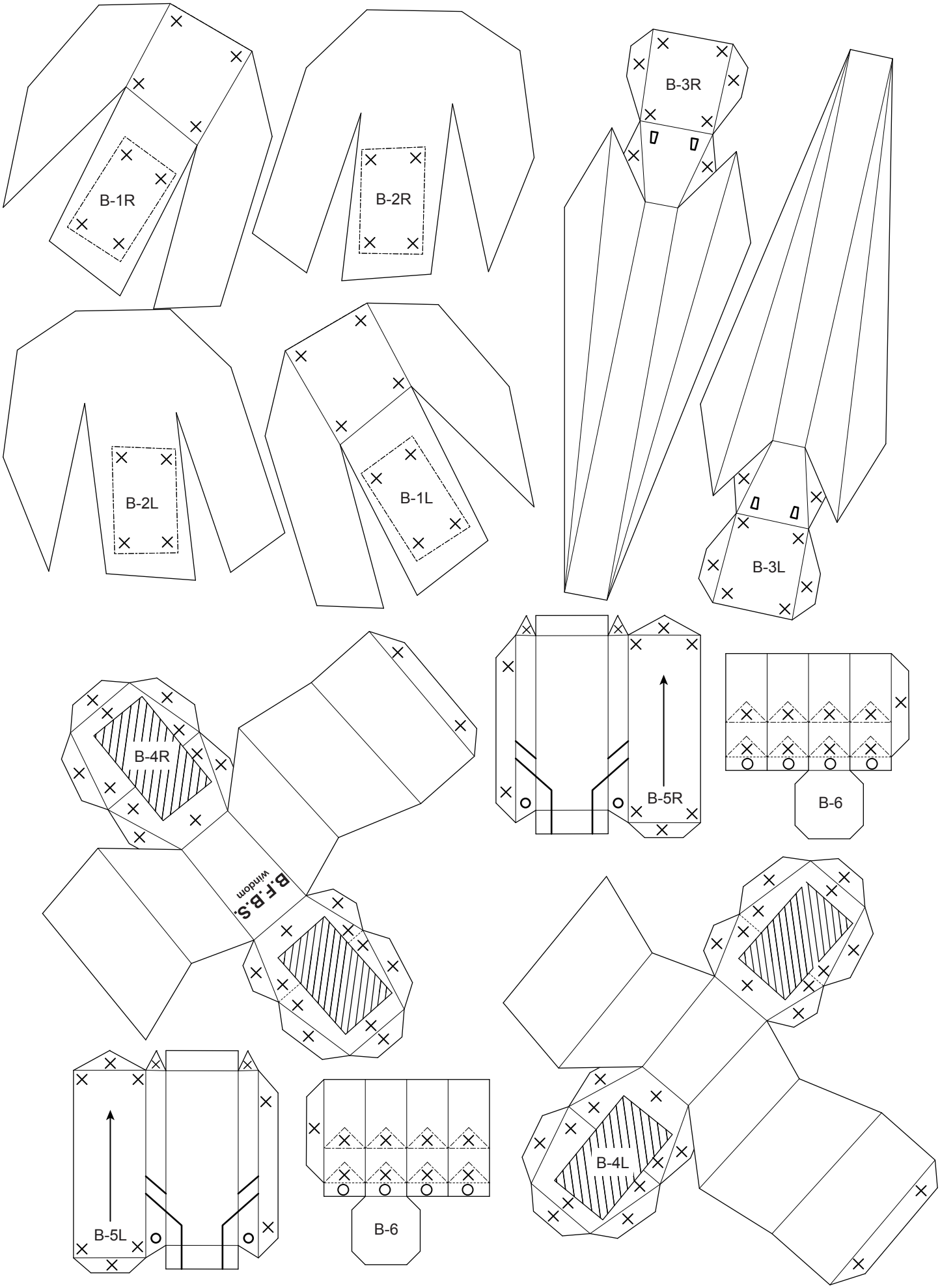

C 白/White Boot Fighter Black Selena

http://bataf.blog.163.com

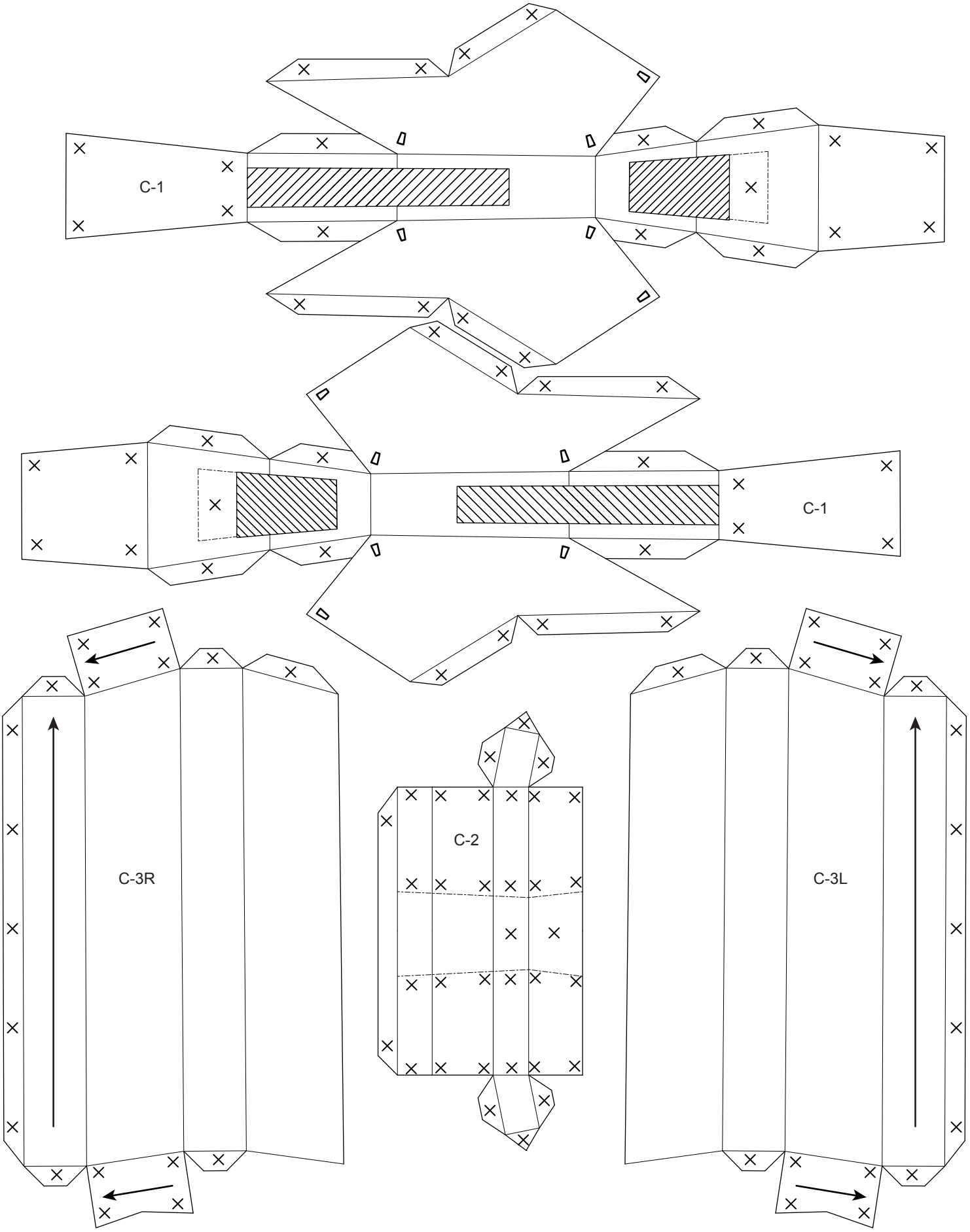

D 白/White

http://bataf.blog.163.com

Boot Fighter Black Selena

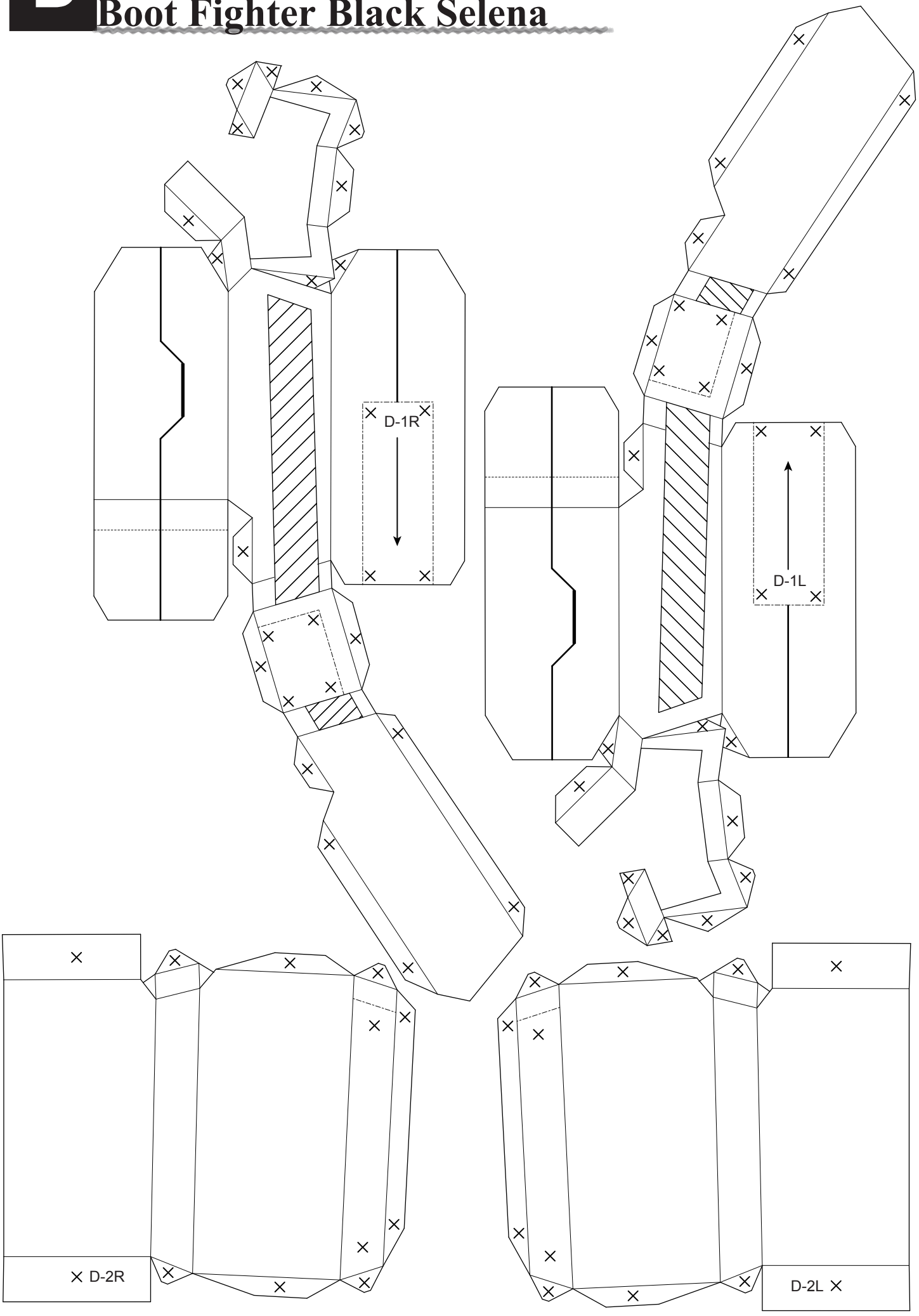

E 白/White Boot Fighter Black Selena

http://bataf.blog.163.com

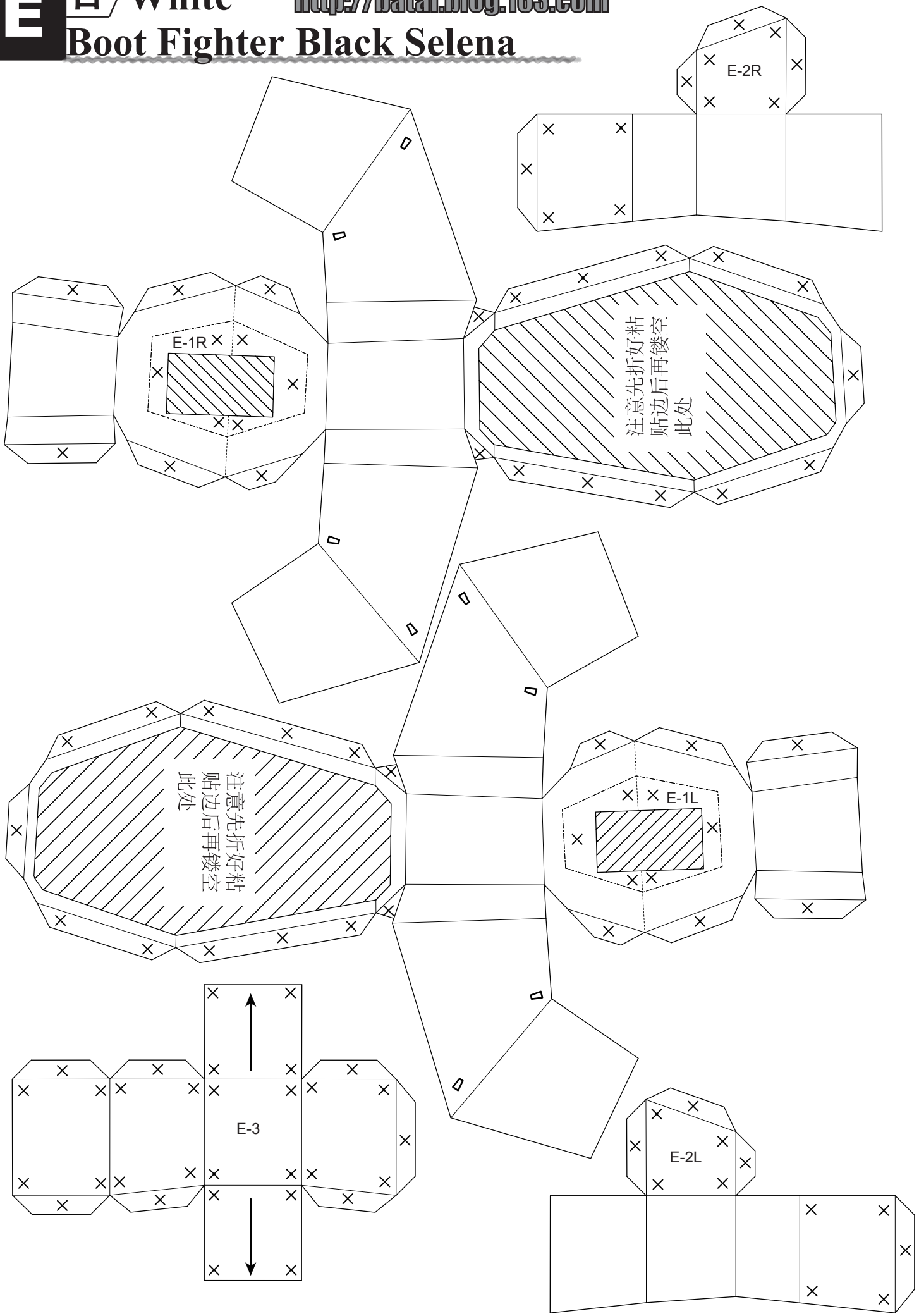

F 白/White

http://bataf.blog.163.com

Boot Fighter Black Selena

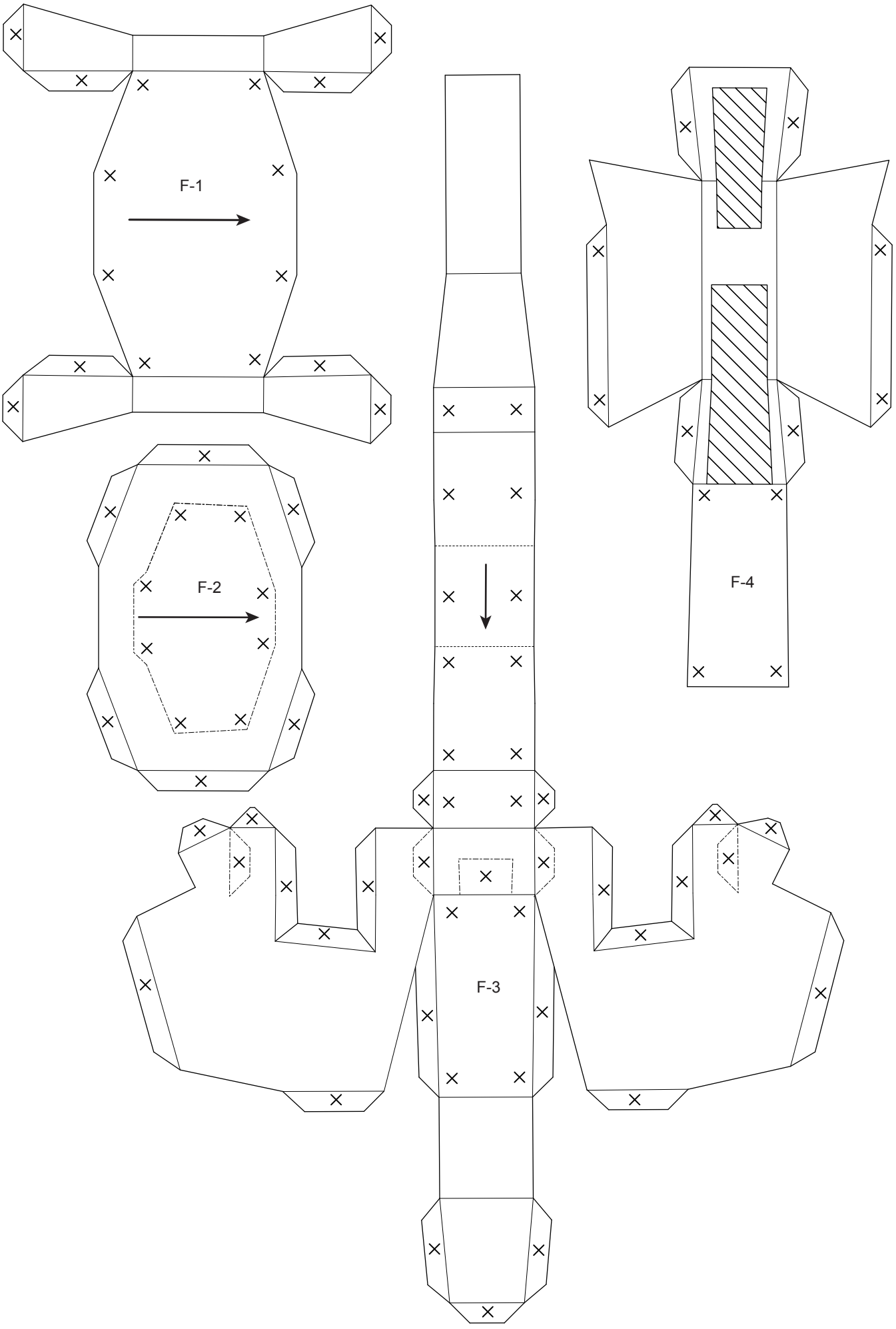

G 白/White Boot Fighter Black Selena

http://bataf.blog.163.com

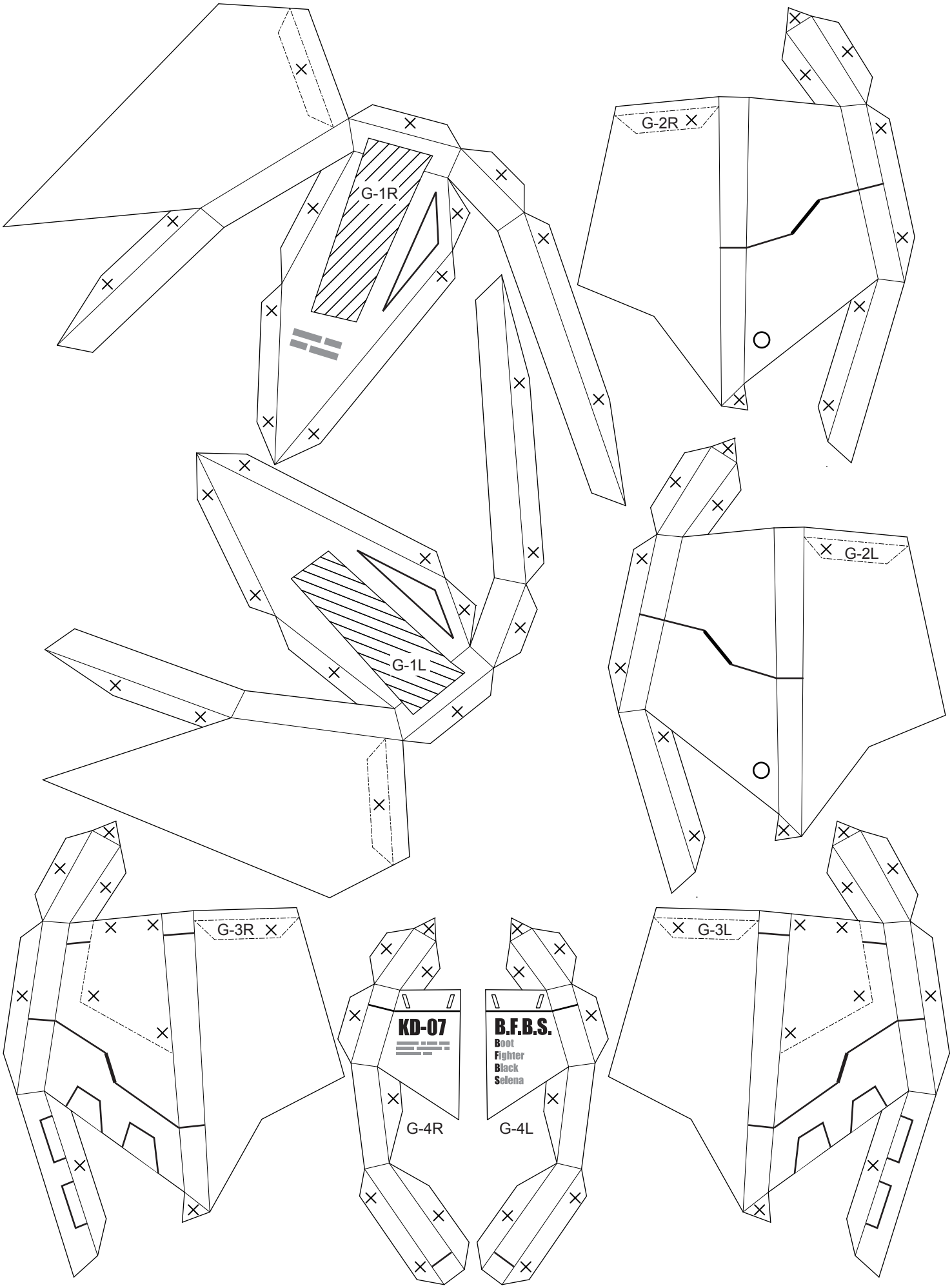

H 白/White

http://bataf.blog.163.com

Boot Fighter Black Selena

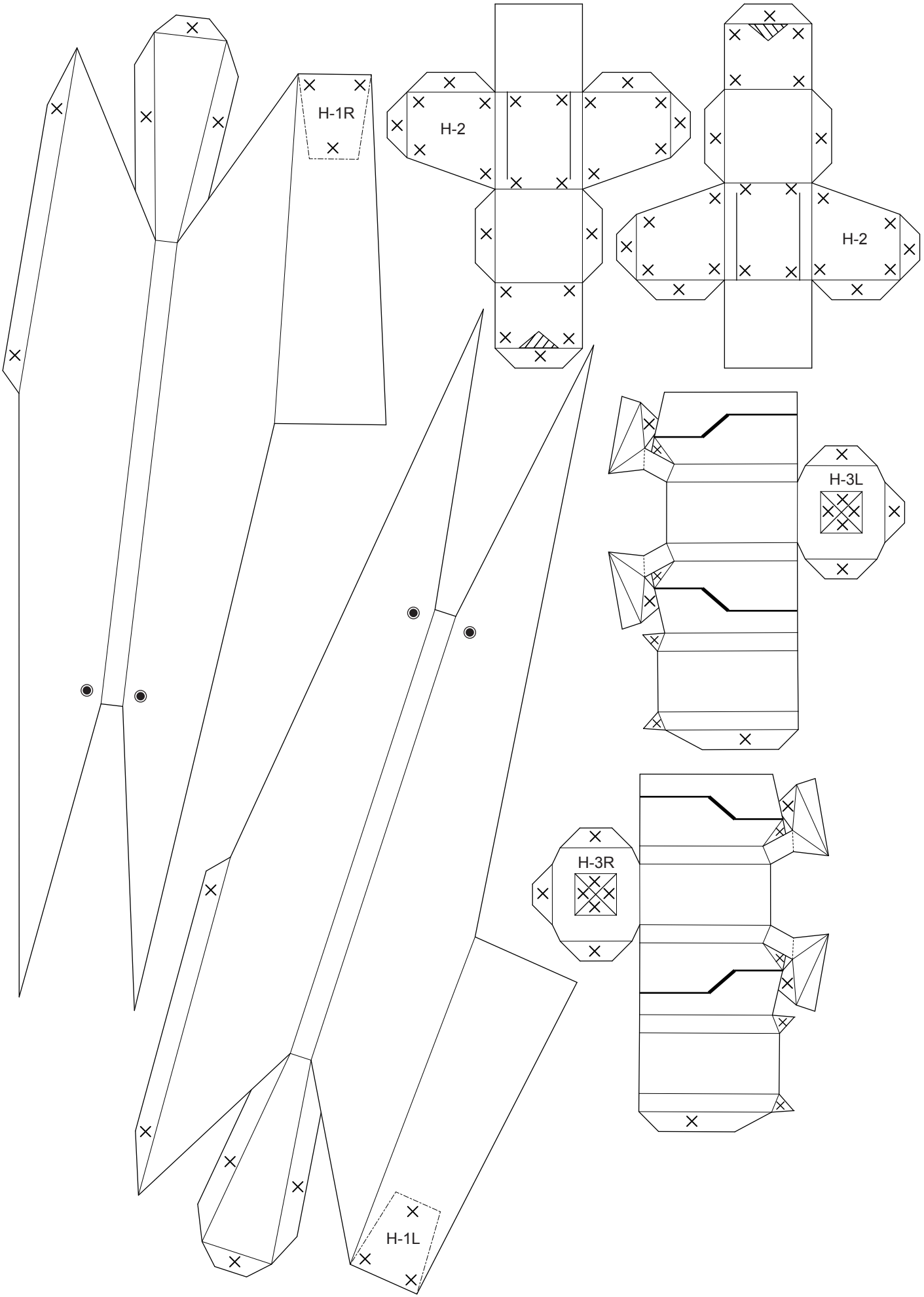

I 白/White

http://bataf.blog.163.com

Boot Fighter Black Selena

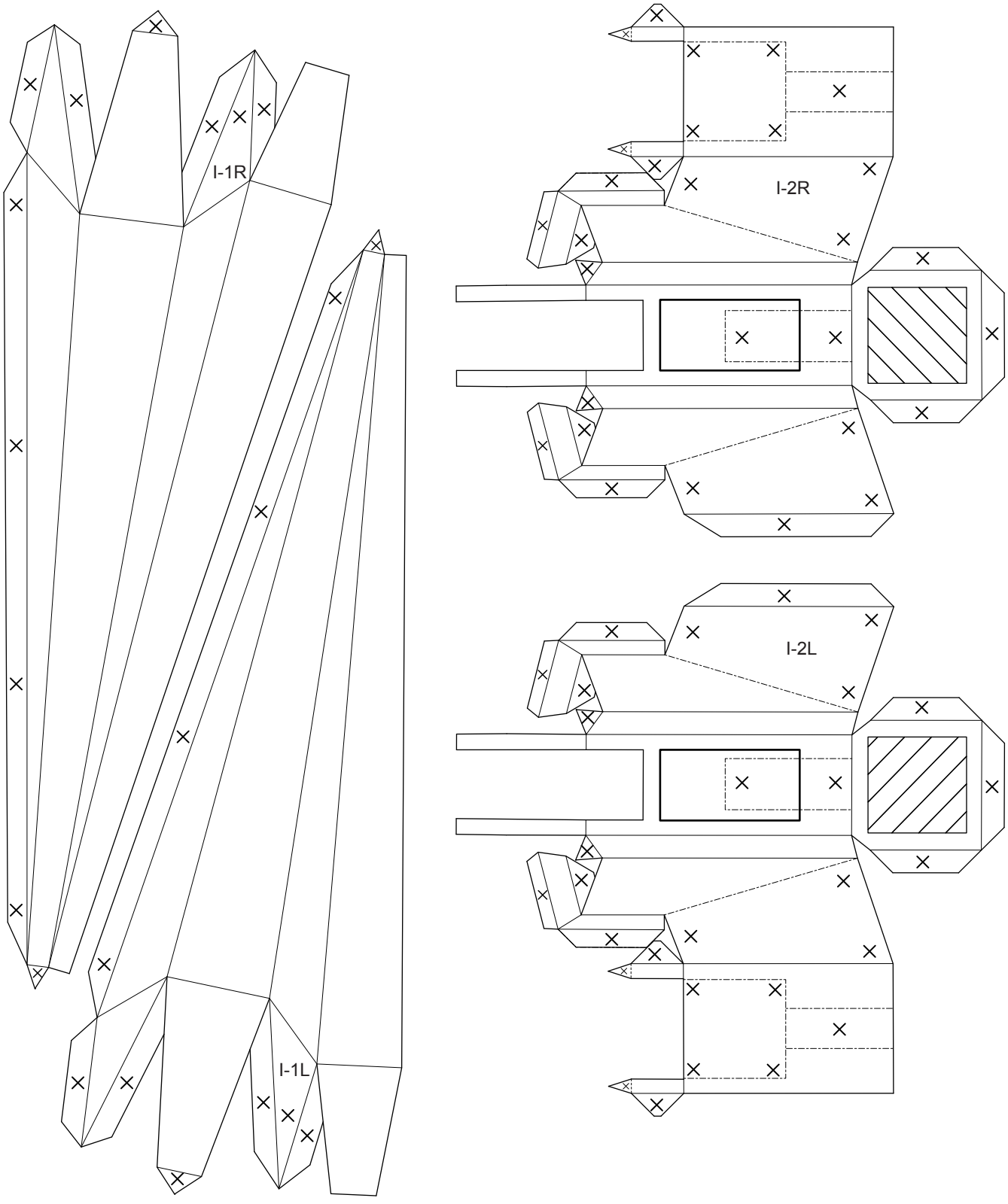

J 白/White Boot Fighter Black Selena

http://bataf.blog.163.com

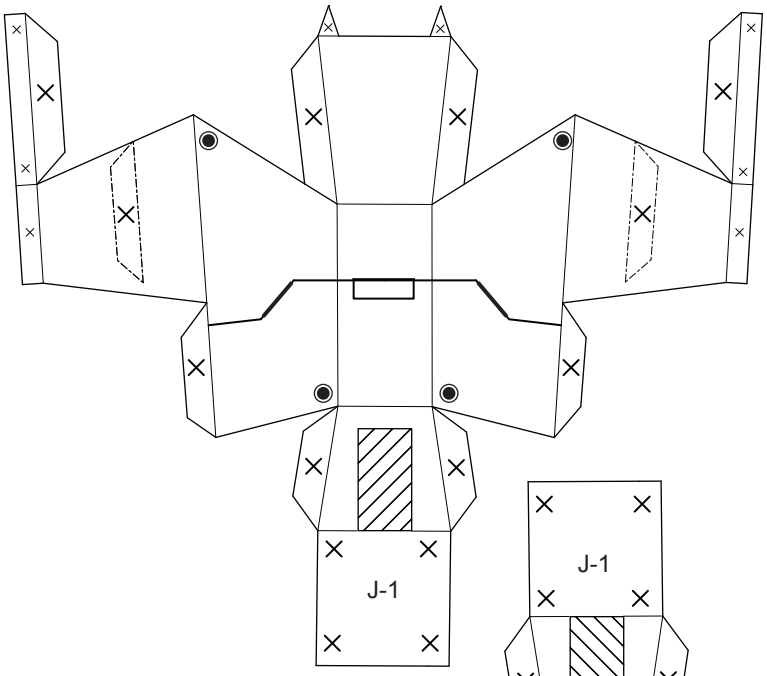

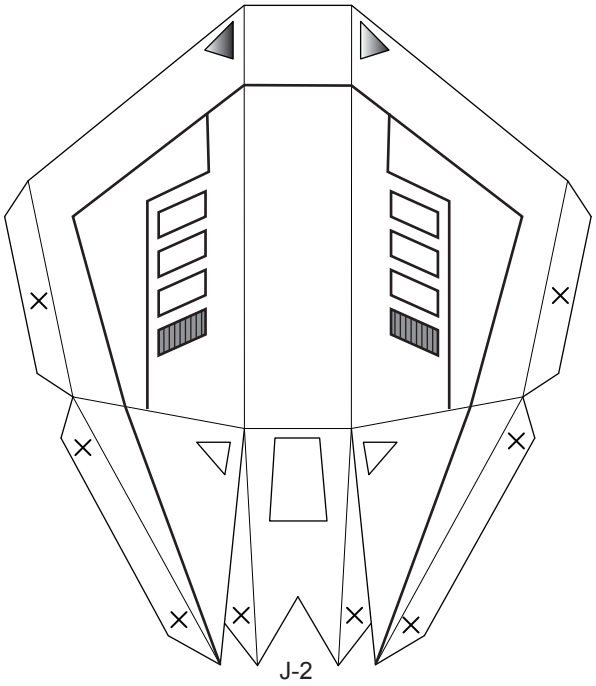

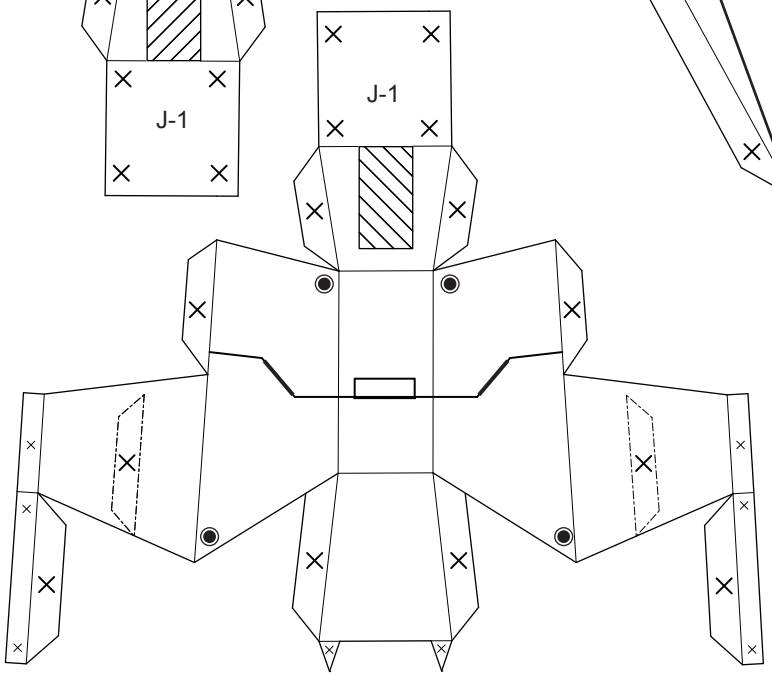

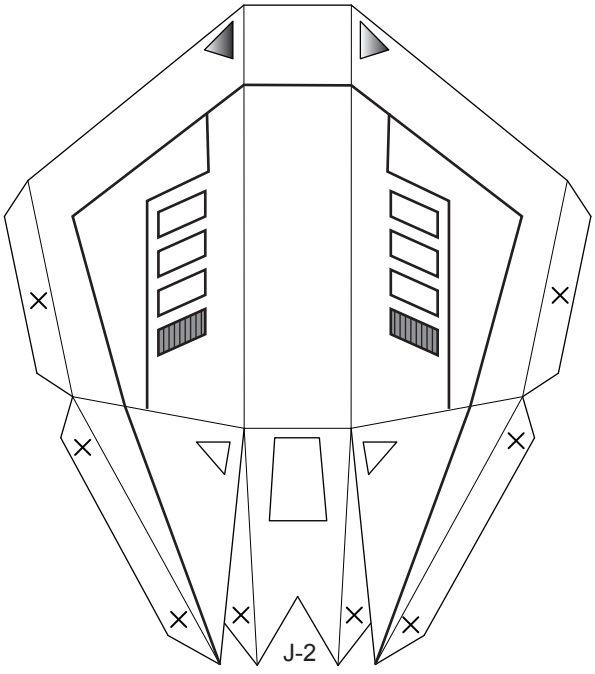

K 灰/Gray

http://bataf.blog.163.com

Boot Fighter Black Selena

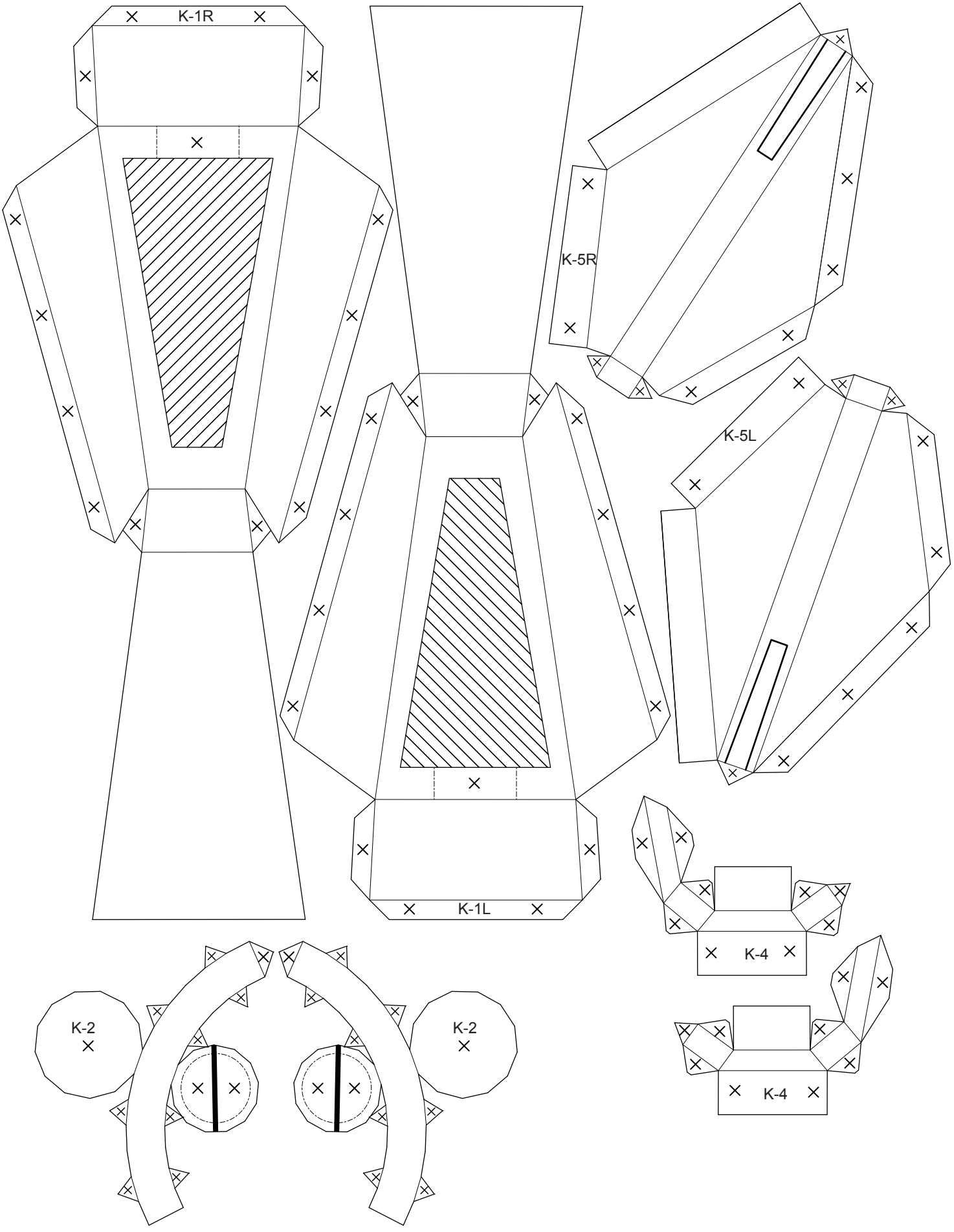

L 灰/Gray

http://bataf.blog.163.com

Boot Fighter Black Selena

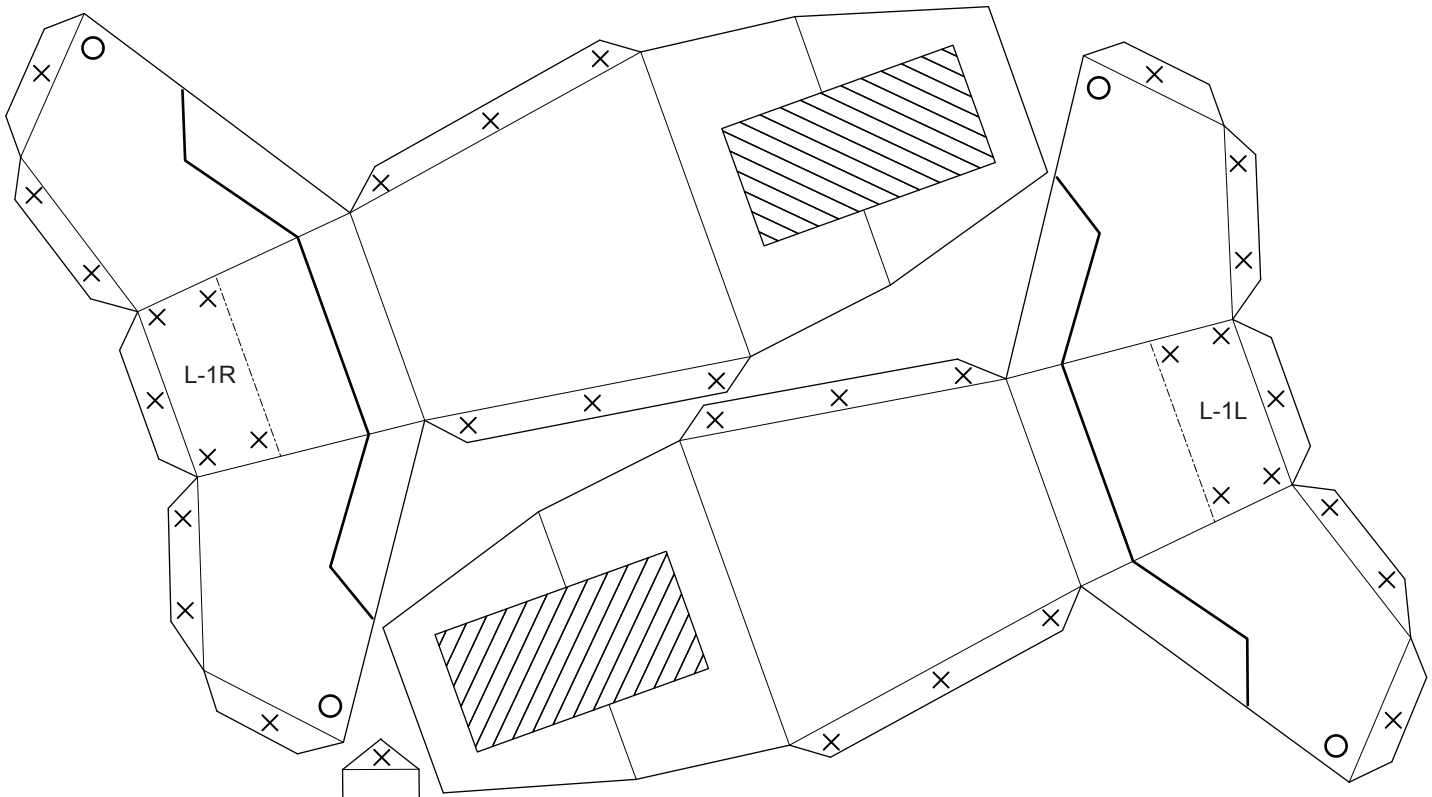

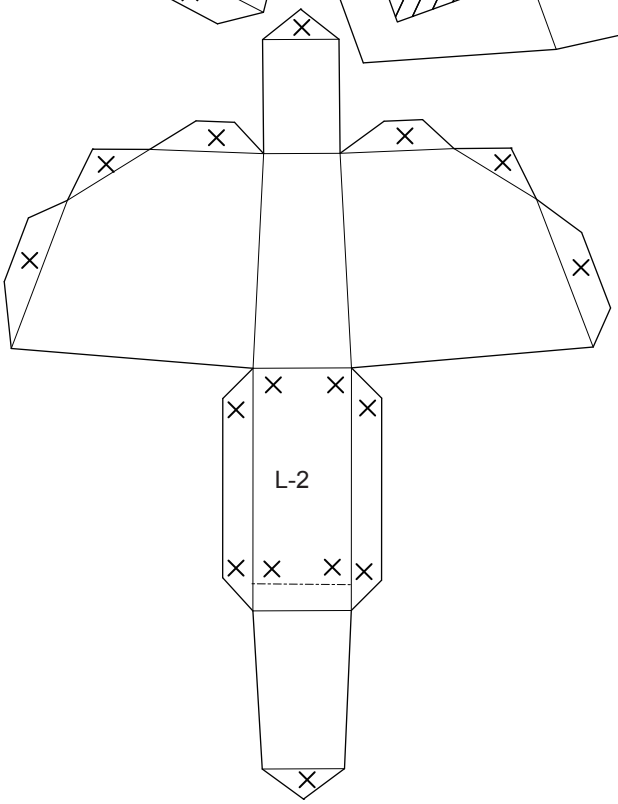

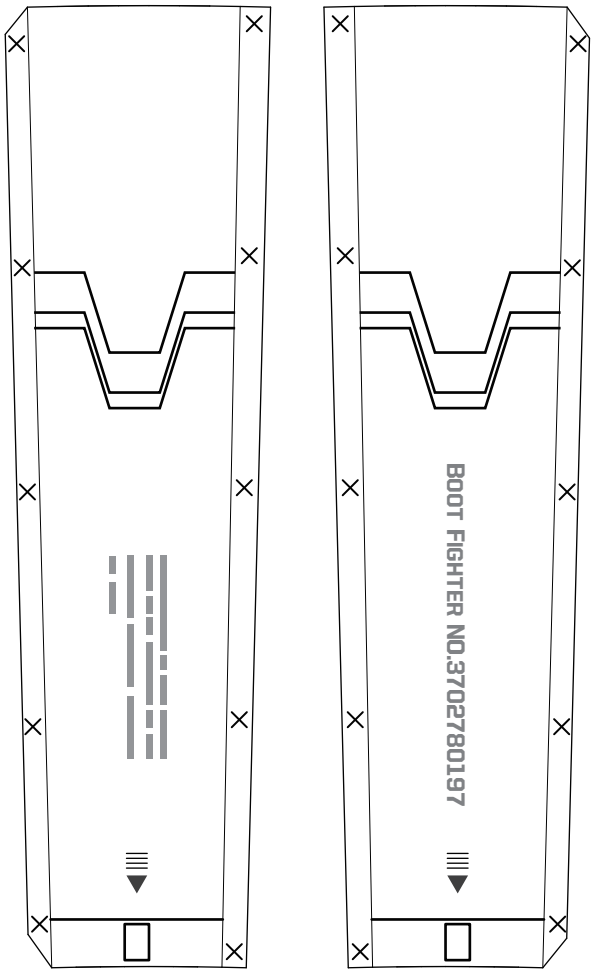

L-3R L-3L

M 灰/Gray

http://bataf.blog.163.com

Boot Fighter Black Selena

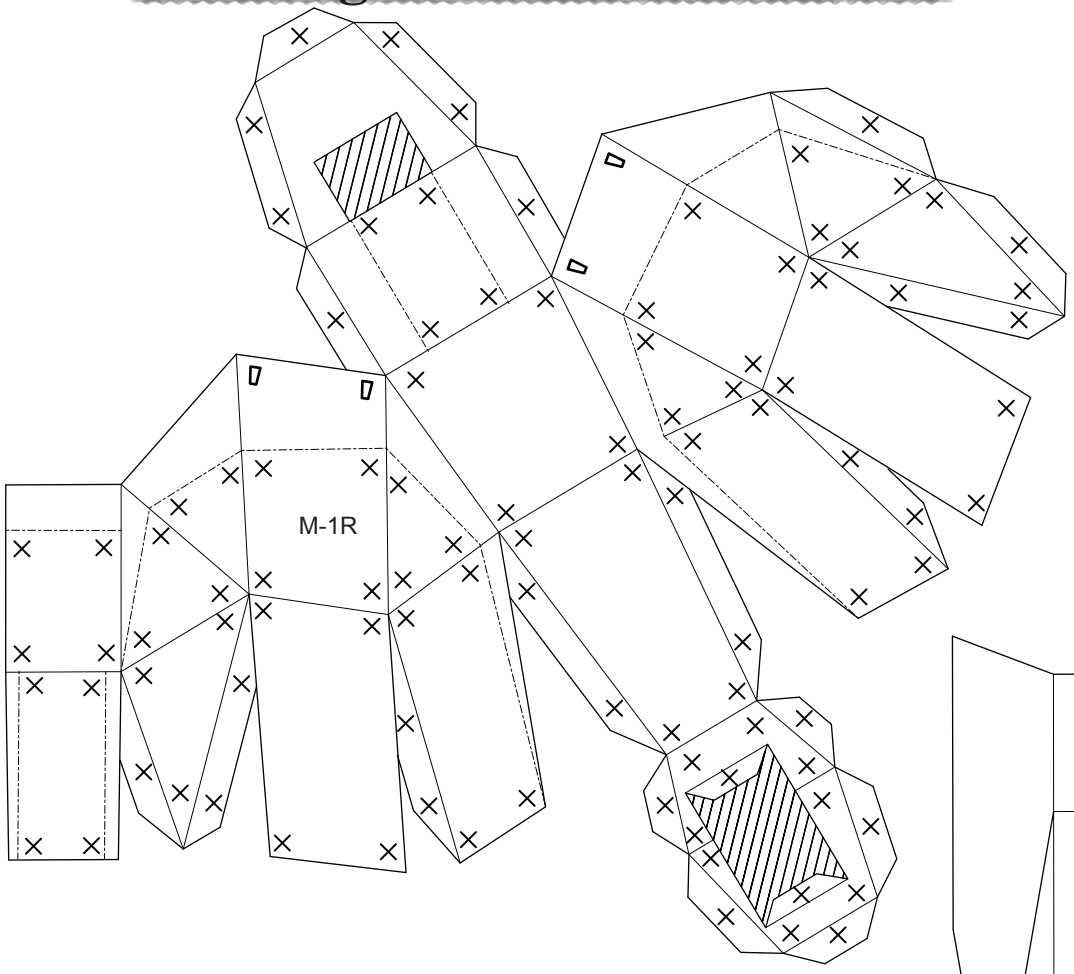

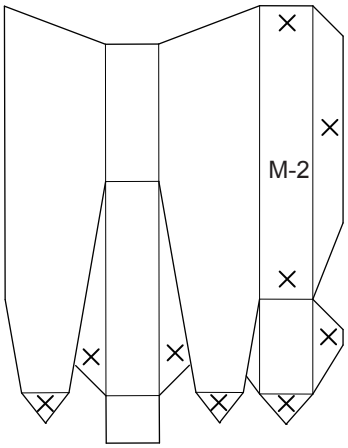

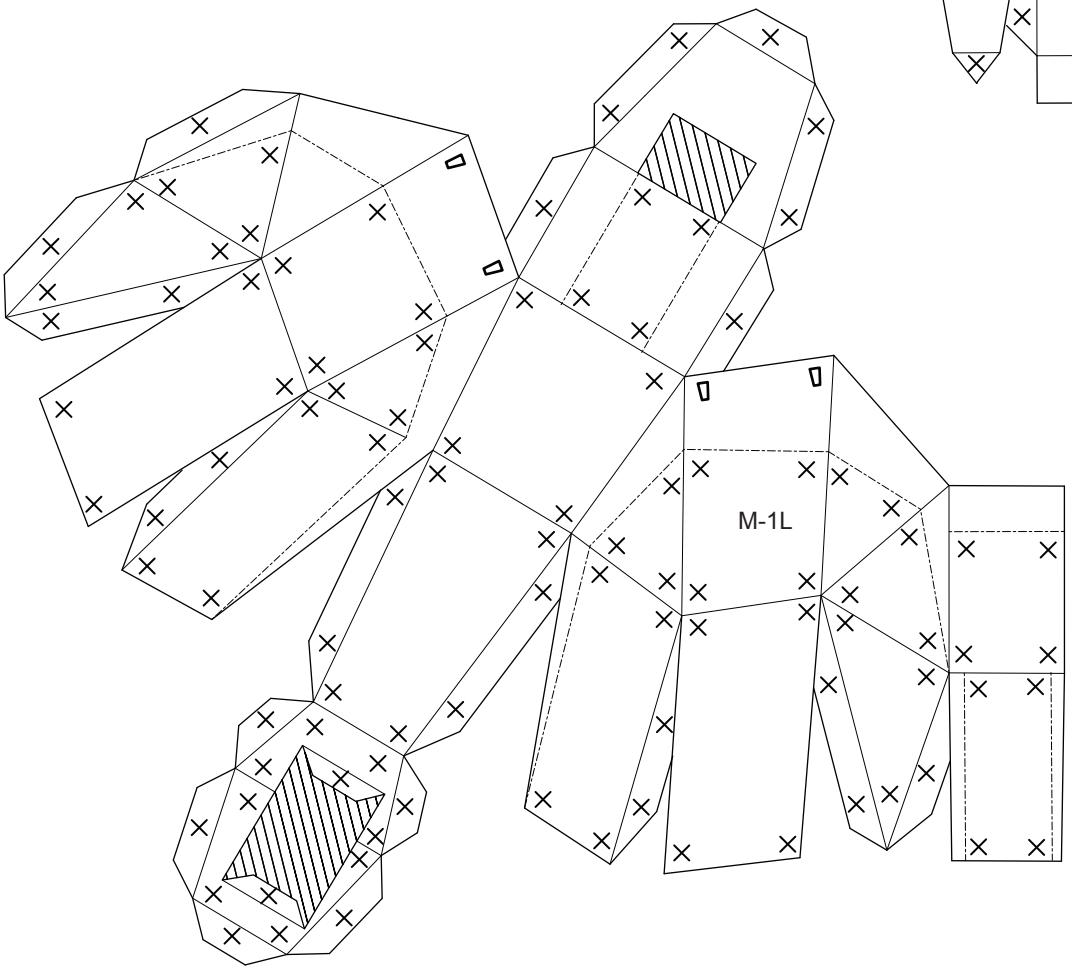

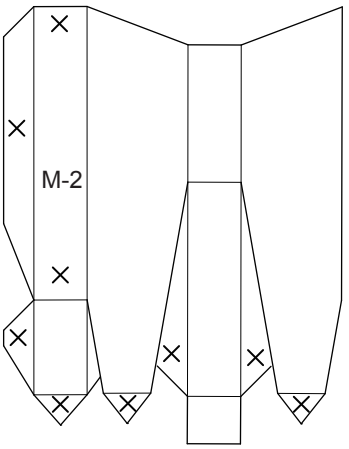

N 灰/Gray

http://bataf.blog.163.com

Boot Fighter Black Selena

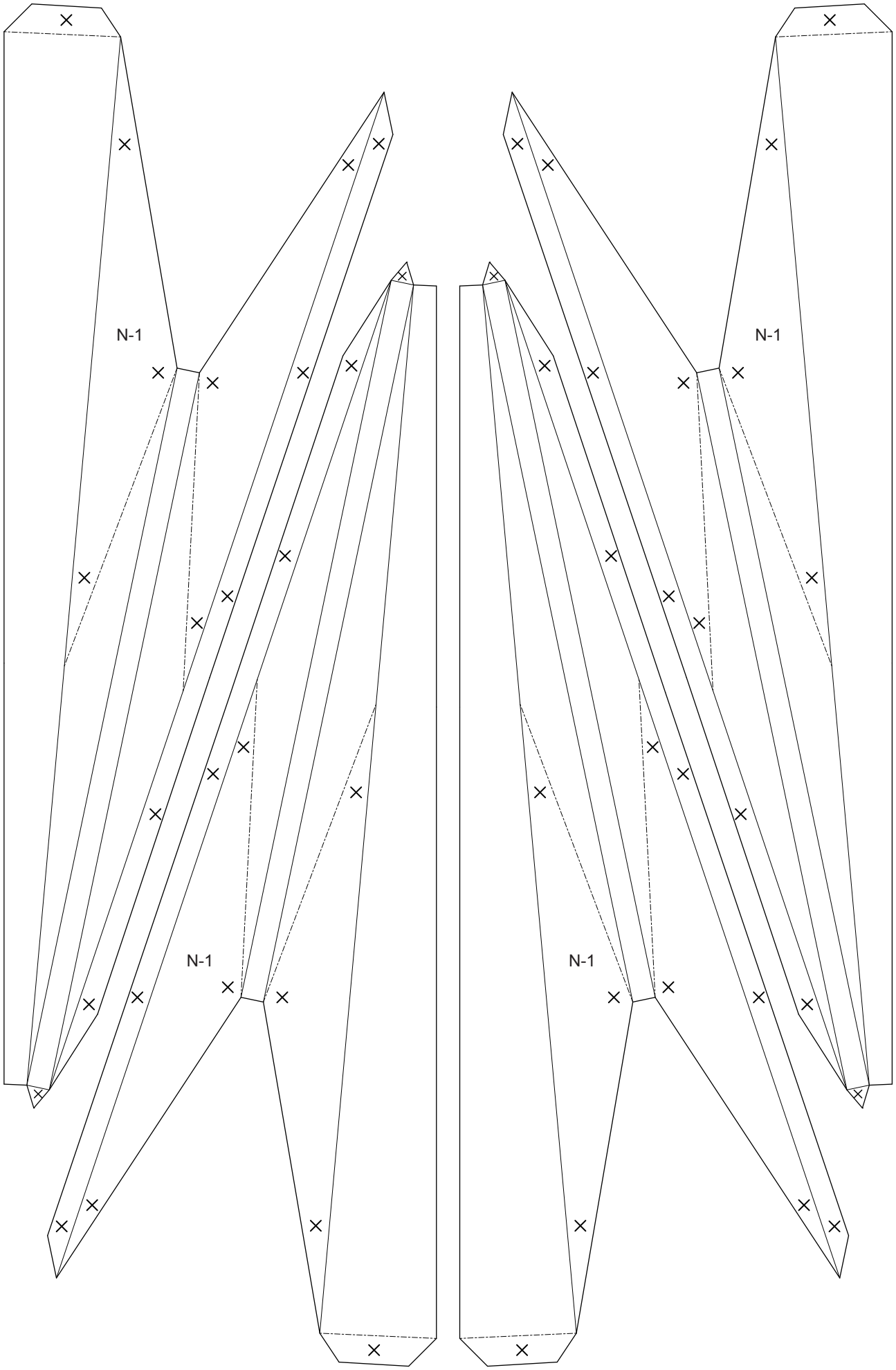

O 金/Gold Boot Fighter Black Selena

http://bataf.blog.163.com

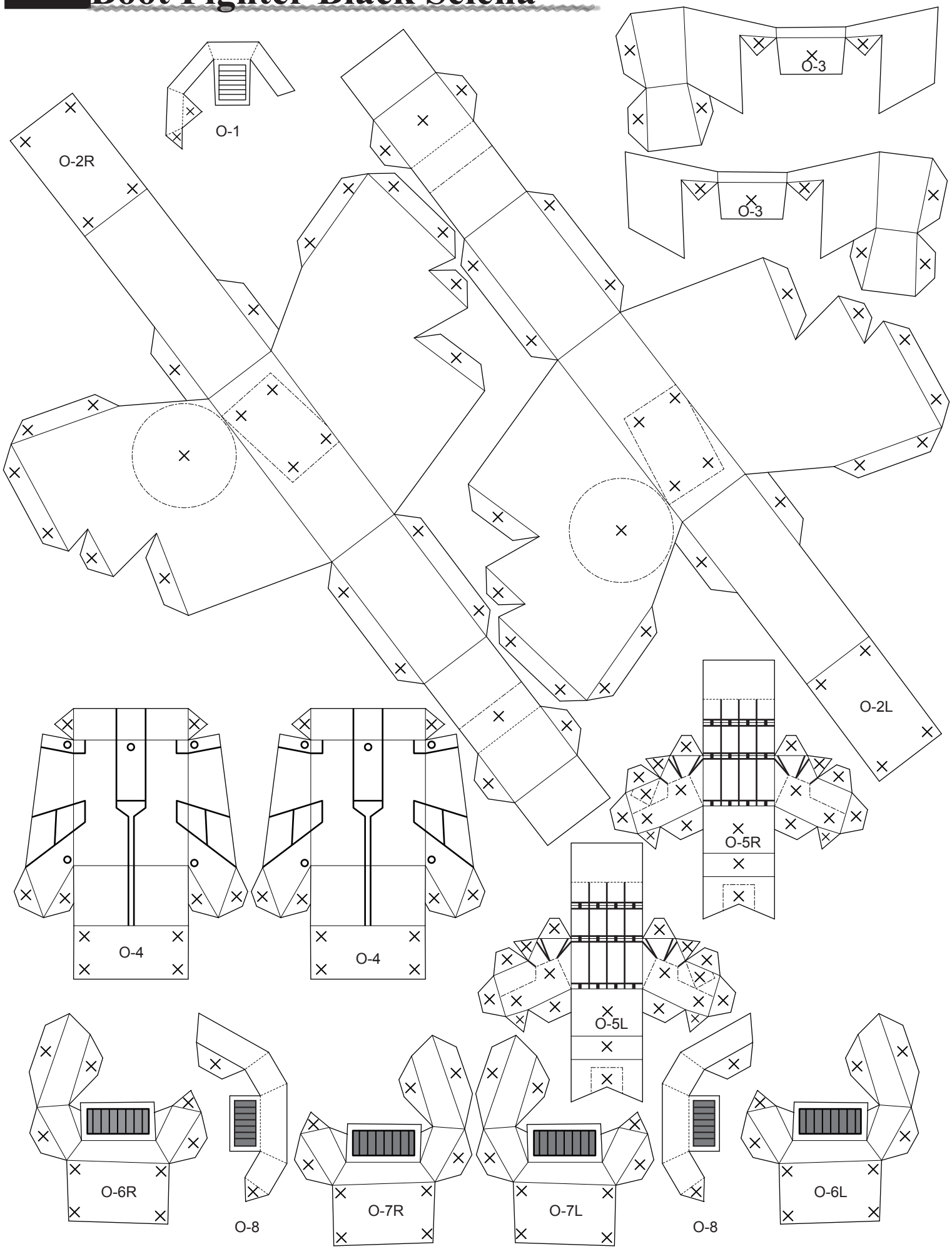

P 金/Gold Boot Fighter Black Selena

http://bataf.blog.163.com

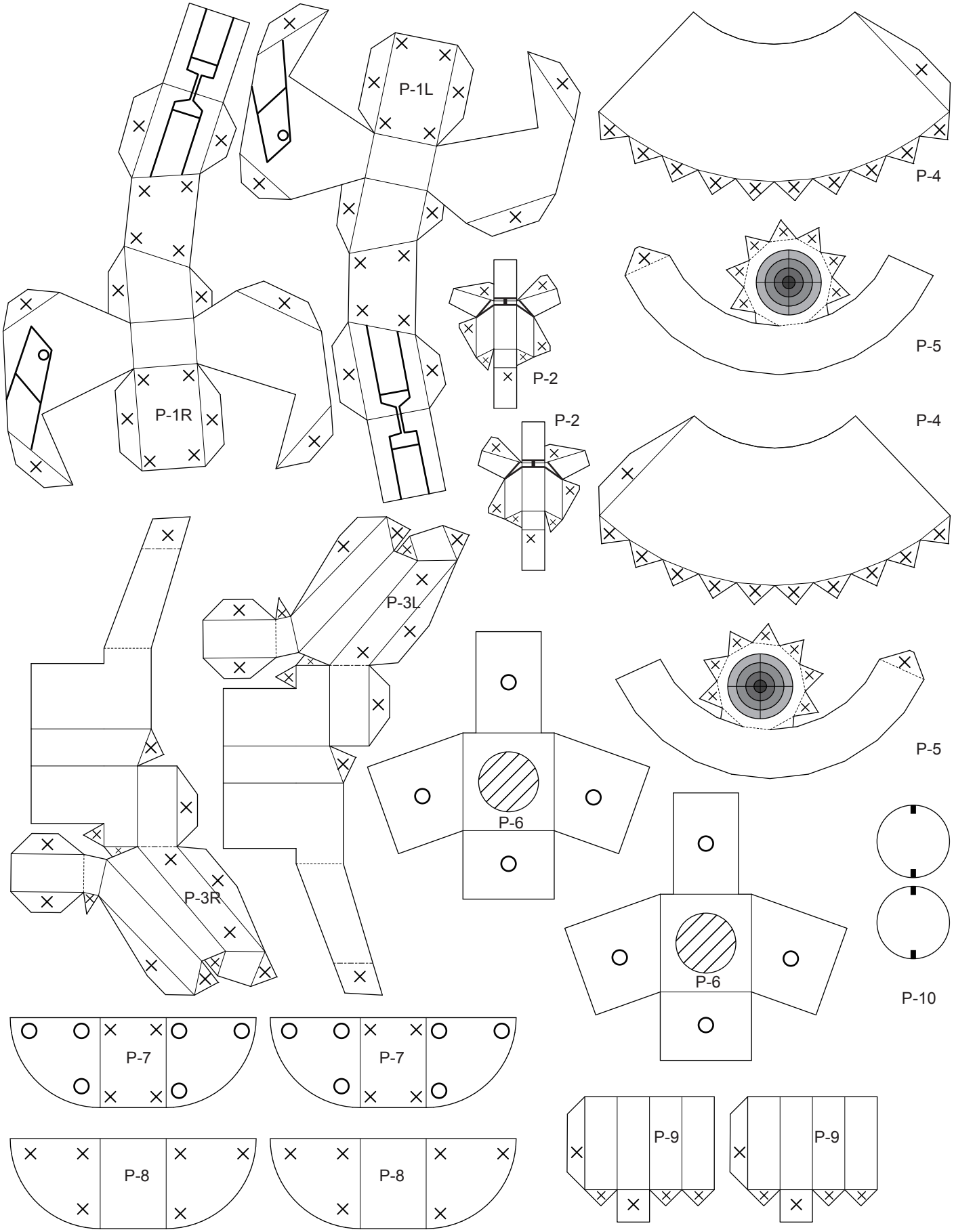

Q 金/Gold

http://bataf.blog.163.com

Boot Fighter Black Selena

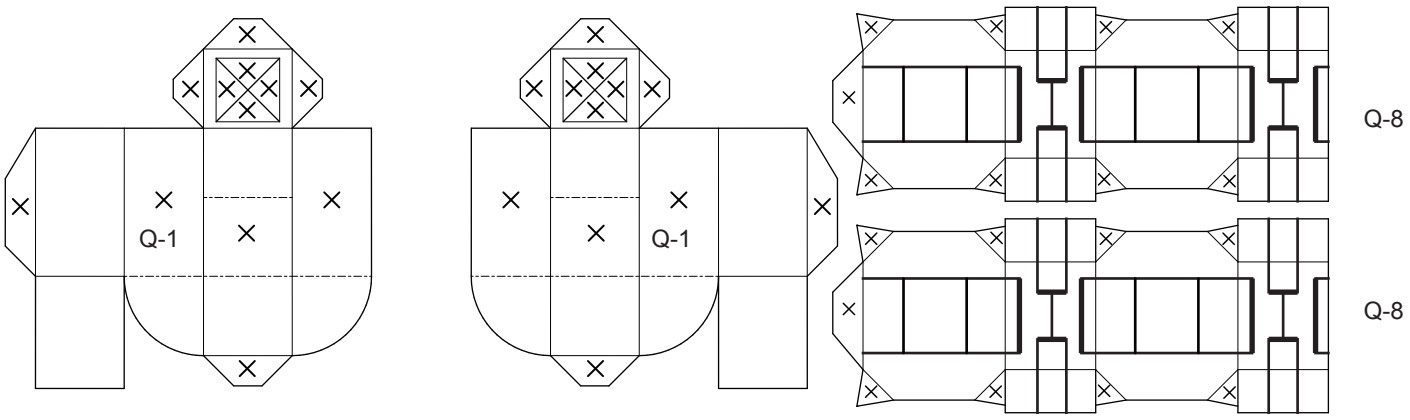

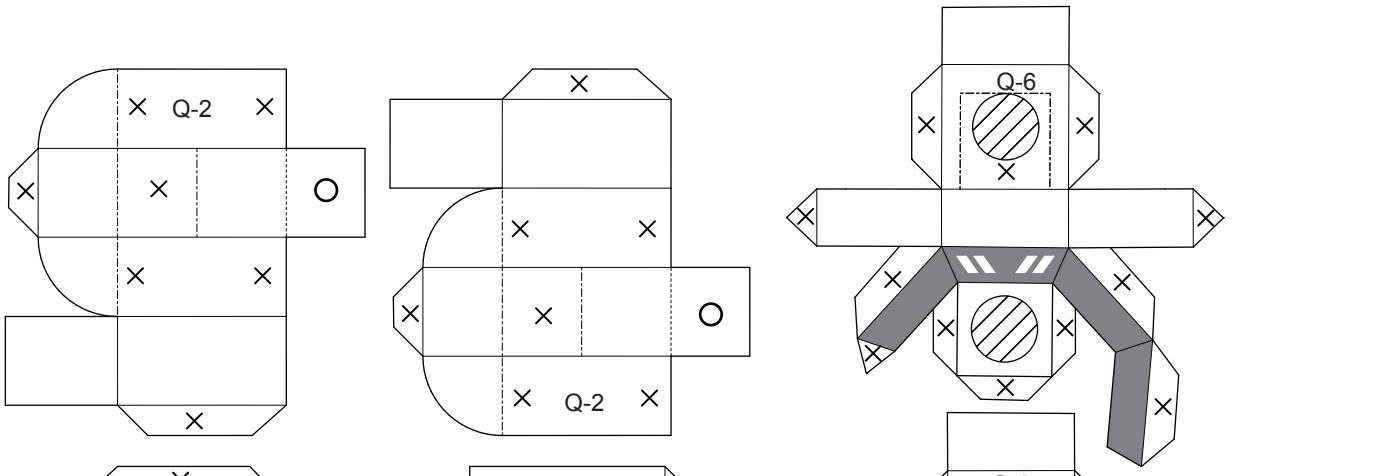

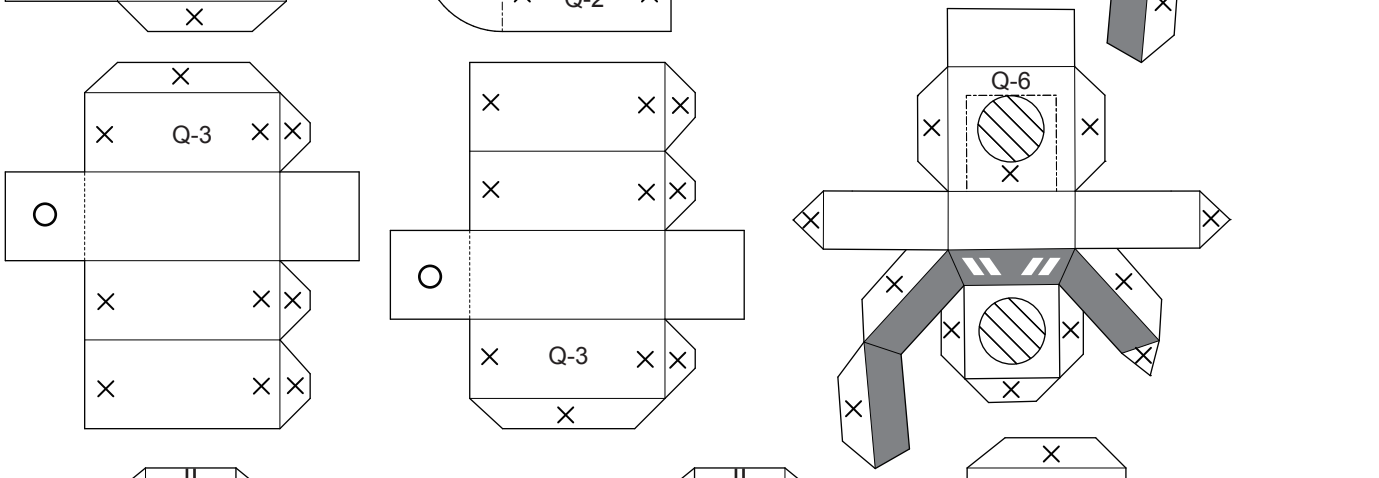

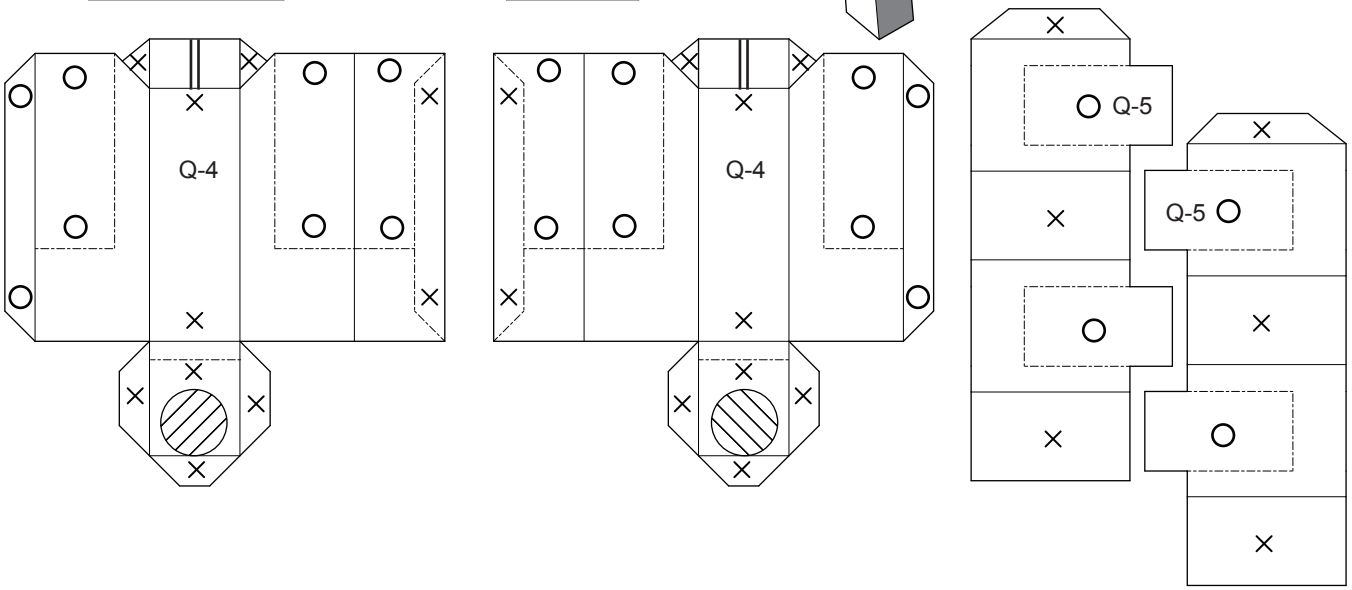

R 蓝/Blue

http://bataf.blog.163.com

Boot Fighter Black Selena

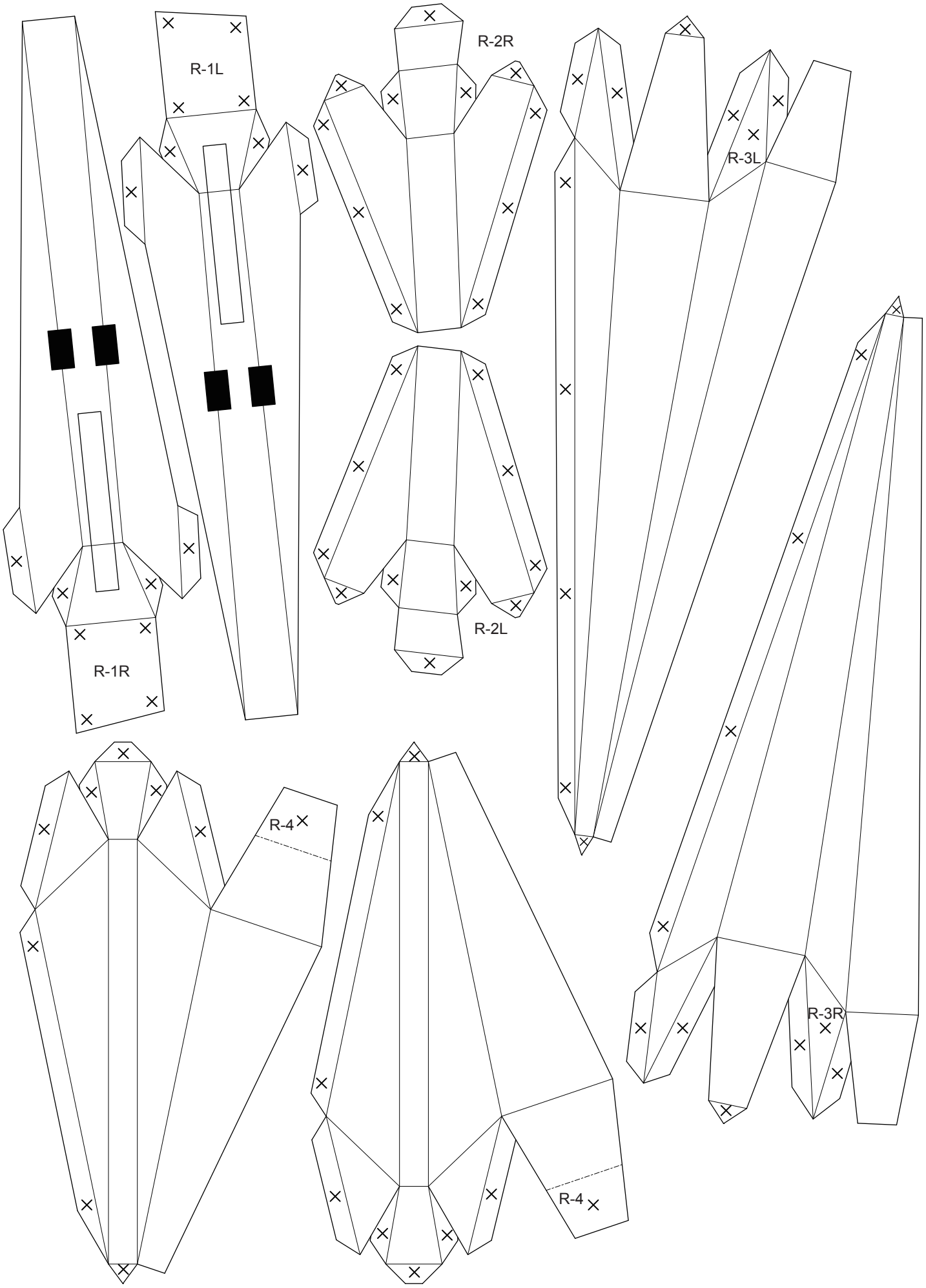

S 红/Red Boot Fighter Black Selena

http://bataf.blog.163.com

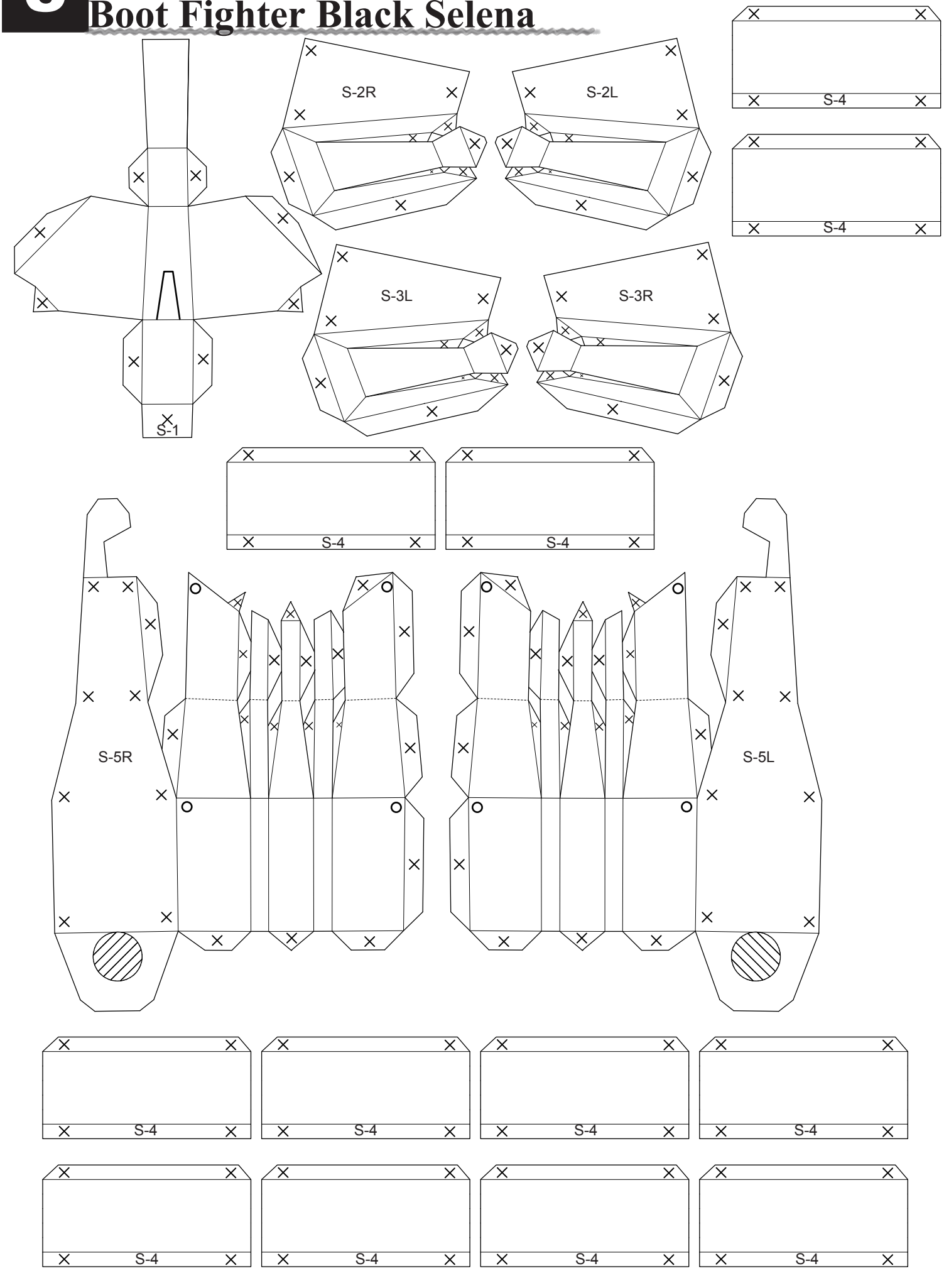

T 彩/Color

http://bataf.blog.163.com

Boot Fighter Black Selena

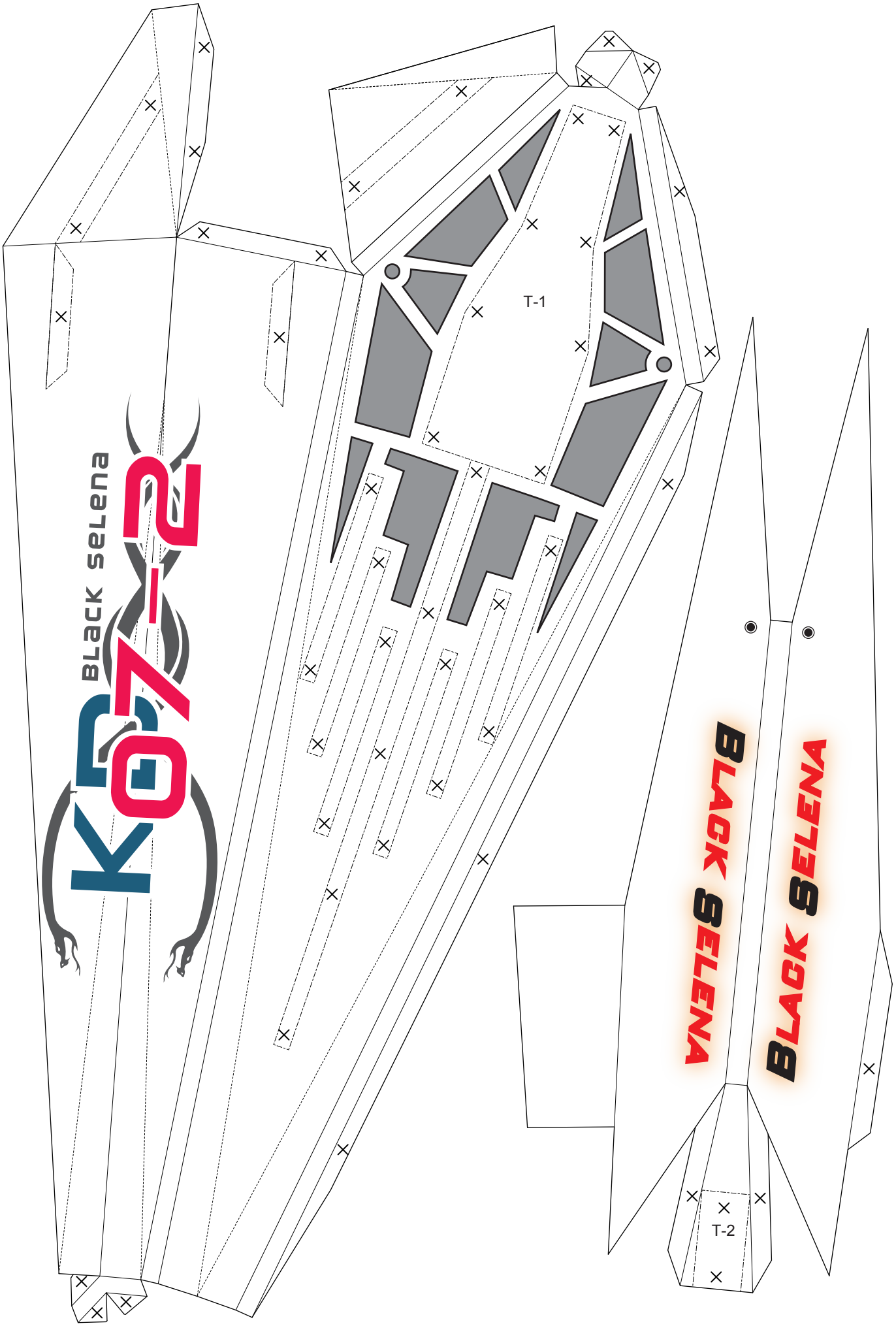

U 彩/Color

http://bataf.blog.163.com

Boot Fighter Black Selena

